MPI
CUSTOM STEEL DOORS & FRAMES

L. F. SCHMIDT LICENSE No. 43409 STATE OF FLORIDA PROFESSIONAL ENGINEER

Digitally signed by Lyndon F Schmidt
Date: 2024.11.13 10:21:20 -05'00'

This item has been digitally signed and sealed by **L. F. Schmidt, P.E.** on the date adjacent to the seal.

Printed copies of this document are not considered signed and sealed and the signature must be verified on any electronic copies.

THIS PRODUCT APPROVAL IS VALID ONLY FOR THE STATE OF FLORIDA

"SST" COMMERCIAL STEEL DOOR INSWING/OUTSWING

"IMPACT"

GENERAL NOTES

1. This product has been evaluated and is in compliance with the 8th Edition (2023) Florida Building Code (FBC) structural requirements including the "High Velocity Hurricane Zone" (HVHZ).
2. Product anchors shall be as listed and spaced as shown on details. Anchor embedment to base material shall be beyond wall dressing or stucco.
3. When used in the "HVHZ" this product complies with Section 1626 of the Florida Building Code and does not require an impact resistant covering.
4. When used in areas outside of the "HVHZ" requiring wind borne debris protection, this product complies with FBC Sections 1609.1.2 & R301.2.1.2 and does not require an impact resistant covering. This product meets missile level "D" and includes Wind Zone 4 as defined in ASTM E 1996 and FBC Sections 1609.1.2.2 & R301.2.1.2.1.
5. Site conditions that deviate from the details of this drawing require further engineering analysis by a licensed engineer or registered architect.
6. This product does not meet the water infiltration requirements for the "HVHZ" and shall be installed only in non-habitable areas or at habitable locations protected by an overhang or canopy such that the angle between the edge of canopy or overhang to sill is less than 45 degrees.
7. When used in the "HVHZ", steel must be protected as specified in FBC Section 2222.6

TABLE OF CONTENTS

SHEET #	DESCRIPTION
1	Typical elevation, design pressures & general notes
2	Door panel details
3	Horizontal & vertical cross sections
4	Horizontal cross sections
5	Horizontal cross sections
6	Frame anchoring
7	Frame anchoring
8	Bill of materials & components

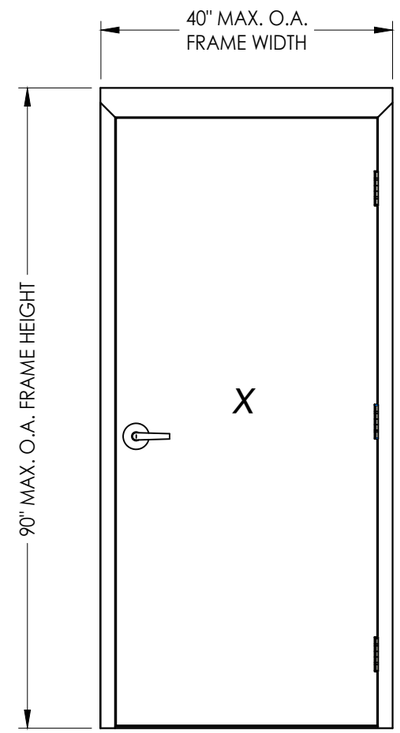

CYLINDRICAL LOCK

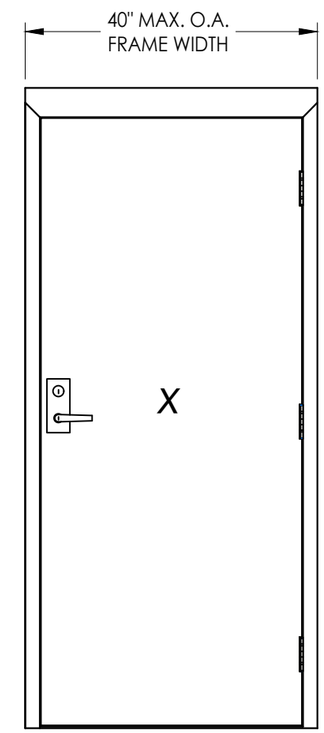

MORTISE LOCK

CONFIGURATION	MAX FRAME DIMENSION	DOOR	DESIGN PRESSURE (PSF) INSWING		DESIGN PRESSURE (PSF) OUTSWING	
			POSITIVE	NEGATIVE	POSITIVE	NEGATIVE
SINGLE	40.0" x 90.0"	16 GA.	+55.0	-55.0	+50.0	-50.0

Documents Prepared By:
Lyndon F. Schmidt
P.E. No. 43409
RW BUILDING CONSULTANTS, INC.
P.O. Box 230, Valrico, FL 33595
Phone No.: 813.659.9197
FBPE Registry No. 9813

PRODUCT: MPI COMMERCIAL STEEL DOOR

PART OR ASSEMBLY: TYPICAL ELEVATION, DESIGN PRESSURES & GENERAL NOTES

NO.	DATE	REVISIONS	BY

DATE: 8/20/24
SCALE: N.T.S.
DWG. BY: LFS
CHK. BY: RW
DRAWING NO.: FL-40948.6
SHEET 1 OF 8

© 2024 R.W. BUILDING CONSULTANTS INC.

Z:\2023 FBC Drawings\MPI KY, LLC\FL-40948 R3\FL-40948.6.dwg

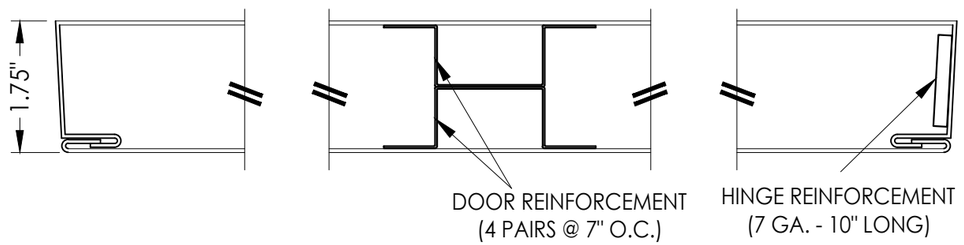

1/2 **HORIZONTAL CROSS SECTION**

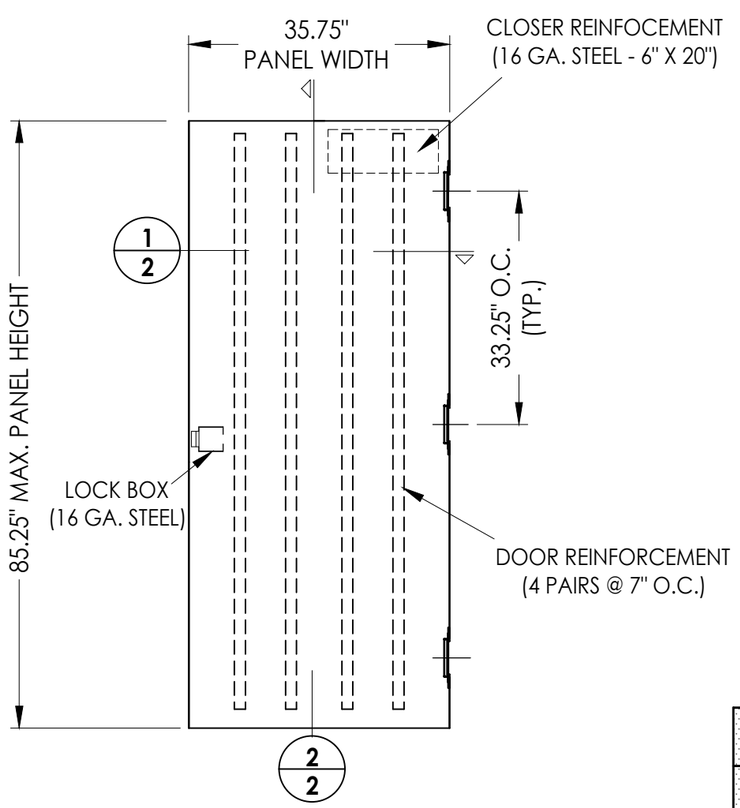

40 **MPI DOOR PANEL**

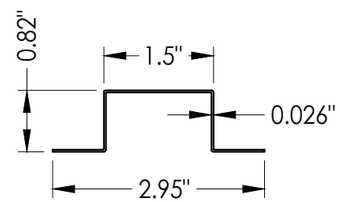

DOOR REINFORCEMENT

HARDWARE CHART	
MANUFACTURER	**MODEL**
PDQ	CYLINDRICAL LOCK: GT SERIES
PDQ	MORTISE LOCK/DEADBOLT : MR SERIES (MRF)

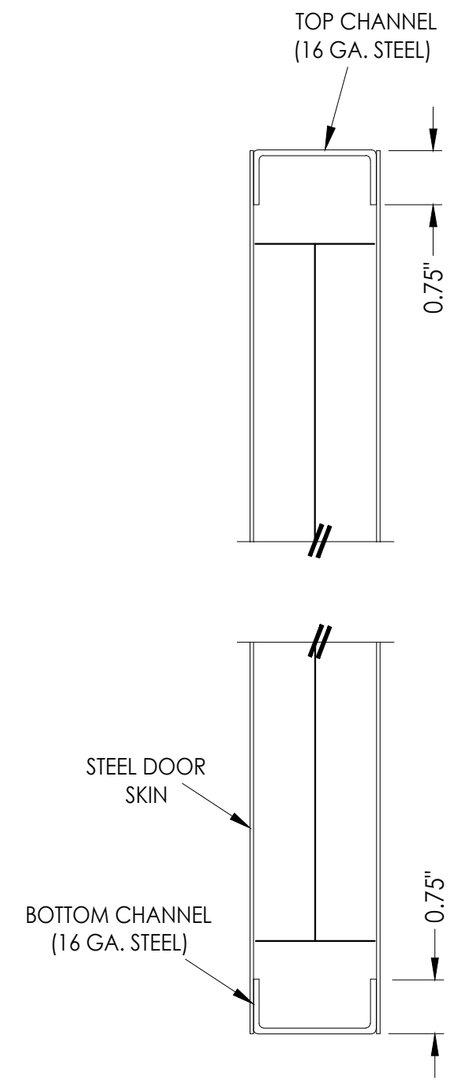

2/2 **VERTICAL CROSS SECTION**

STEEL DOOR SKIN (16 GA.): MIN. 0.055" THK. (Fy = 27,200 PSI MIN.)
CORE MATERIAL: MINERAL WOOL/ROCK WOOL INSULATION

Documents Prepared By:
Lyndon F. Schmidt
P.E. No. 43409
RW BUILDING CONSULTANTS, INC.
P.O. Box 230, Valrico, FL 33595
Phone No.: 813.659.9197
FBPE Registry No. 9813

PRODUCT: MPI STEEL COMMERCIAL DOOR

PART OR ASSEMBLY: DOOR PANEL DETAILS

NO.	DATE	BY

REVISIONS

DATE: 8/20/24
SCALE: N.T.S.
DWG. BY: LFS
CHK. BY: RW
DRAWING NO.: FL-40948.6
SHEET 2 OF 8

© 2024 R.W. Building Consultants Inc.

Z:\2023 FBC Drawings\MPI KY, LLC\FL-40948 R3\FL-40948.6.dwg

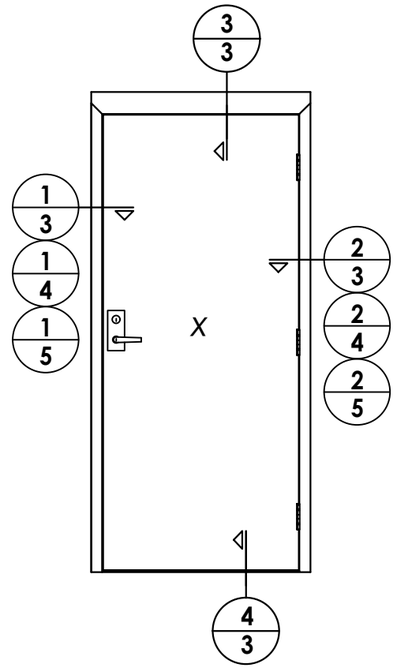

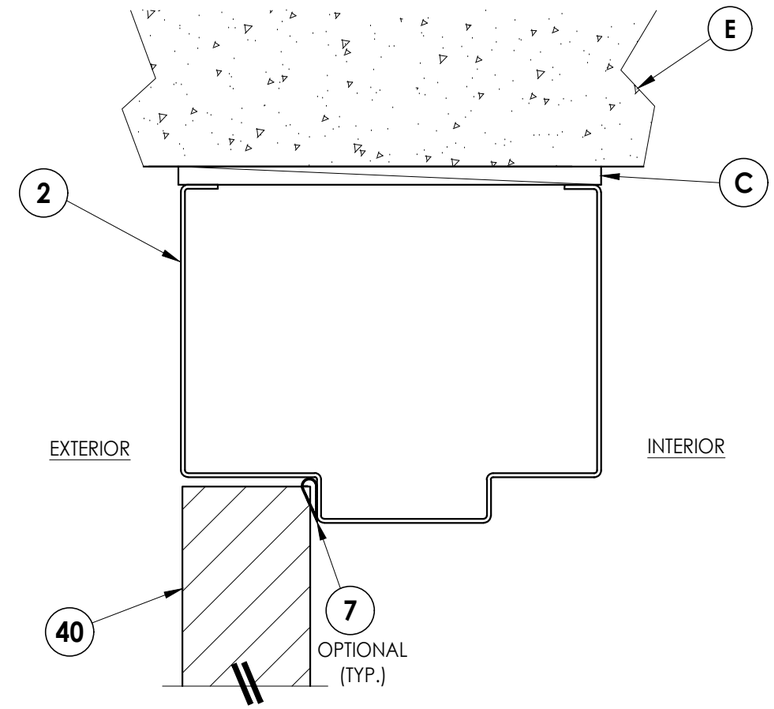

3/3 **VERTICAL CROSS SECTION**

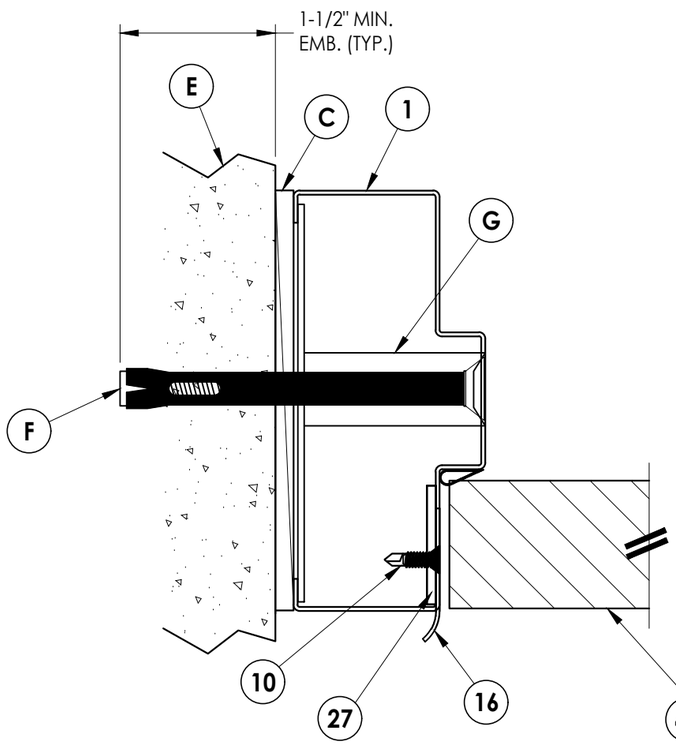

1/3 **HORIZONTAL CROSS SECTION**
Shown w/ Concrete Jamb Anchor

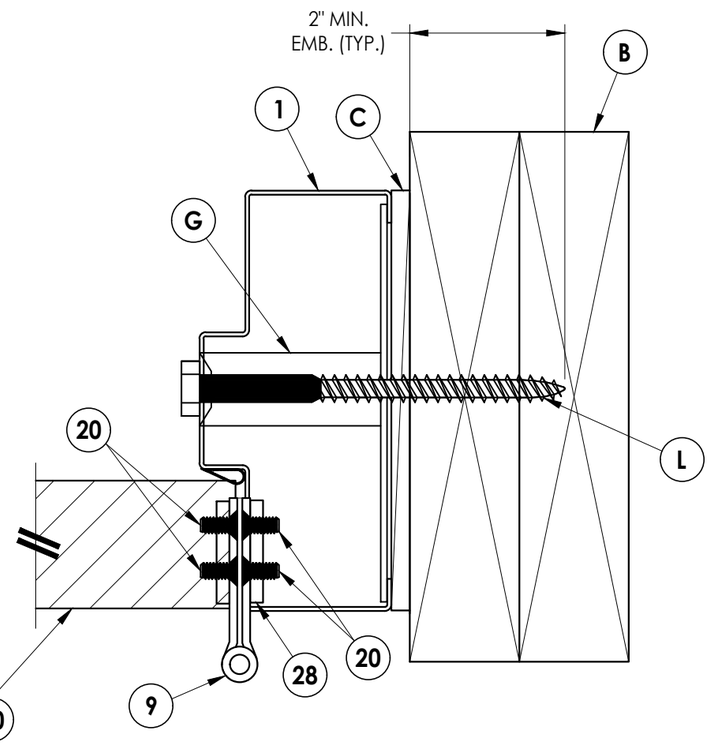

2/3 **HORIZONTAL CROSS SECTION**
Shown w/ 2X Stud Anchor

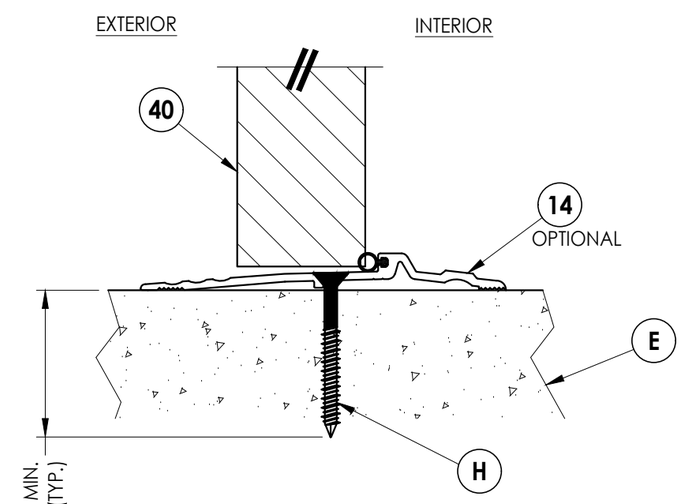

4/3 **VERTICAL CROSS SECTION**

Documents Prepared By:
Lyndon F. Schmidt
P.E. No. 43409

RW BUILDING CONSULTANTS, INC.
P.O. Box 230, Valrico, FL 33595
Phone No.: 813.659.9197
FBPE Registry No. 9813

PRODUCT: *MPI COMMERCIAL STEEL DOOR*

PART OR ASSEMBLY: *HORIZONTAL & VERTICAL CROSS SECTIONS*

NO.	DATE	REVISIONS	BY

DATE: 8/20/24
SCALE: N.T.S.
DWG. BY: LFS
CHK. BY: RW
DRAWING NO.: FL-40948.6
SHEET 3 OF 8

© 2024 R.W. Building Consultants Inc.

Z:\2023 FBC Drawings\MPI KY, LLC\FL-40948 R3\FL-40948.6.dwg

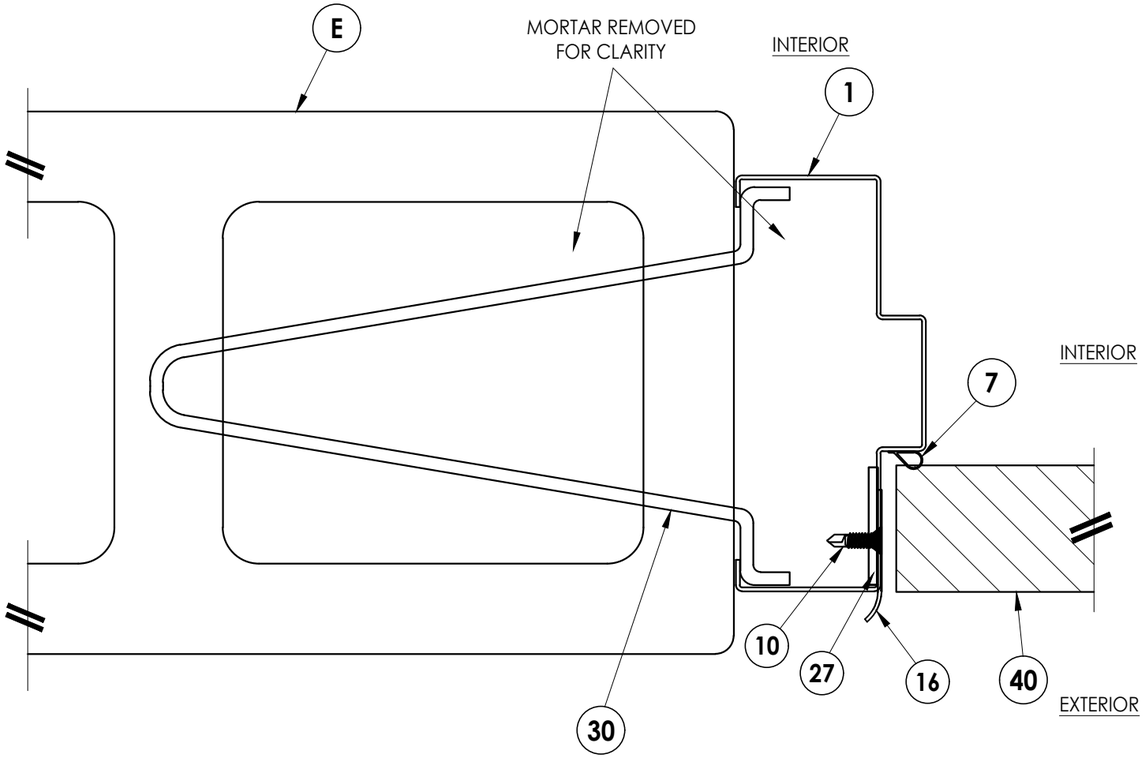

1/4 **HORIZONTAL CROSS SECTION**
Shown w/ Masonry Wire Anchor

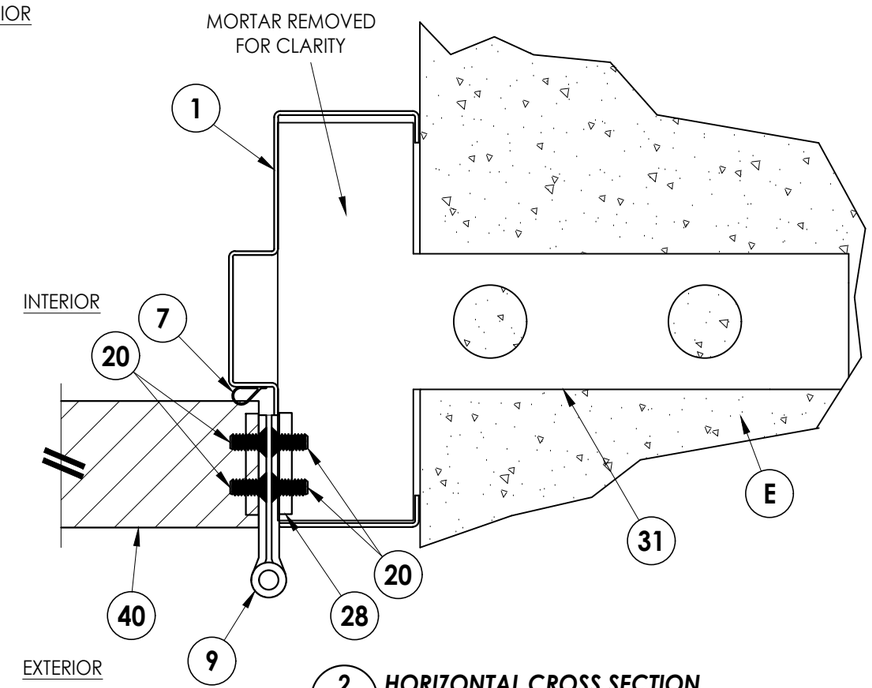

2/4 **HORIZONTAL CROSS SECTION**
Shown w/ Masonry "T"-Anchor

Documents Prepared By:
Lyndon F. Schmidt
P.E. No. 43409

RW BUILDING CONSULTANTS, INC.
P.O. Box 230, Valrico, FL 33595
Phone No.: 813.659.9197
FBPE Registry No. 9813

PRODUCT: MPI COMMERCIAL STEEL DOOR

PART OR ASSEMBLY: HORIZONTAL CROSS SECTIONS

NO.	DATE	REVISIONS	BY
.			

DATE: 8/20/24
SCALE: N.T.S.
DWG. BY: LFS
CHK. BY: RW
DRAWING NO.: FL-40948.6
SHEET 4 OF 8

© 2024 R.W. Building Consultants Inc.

Z:\2023 FBC Drawings\MPI KY, LLC\FL-40948 R3\FL-40948.6.dwg

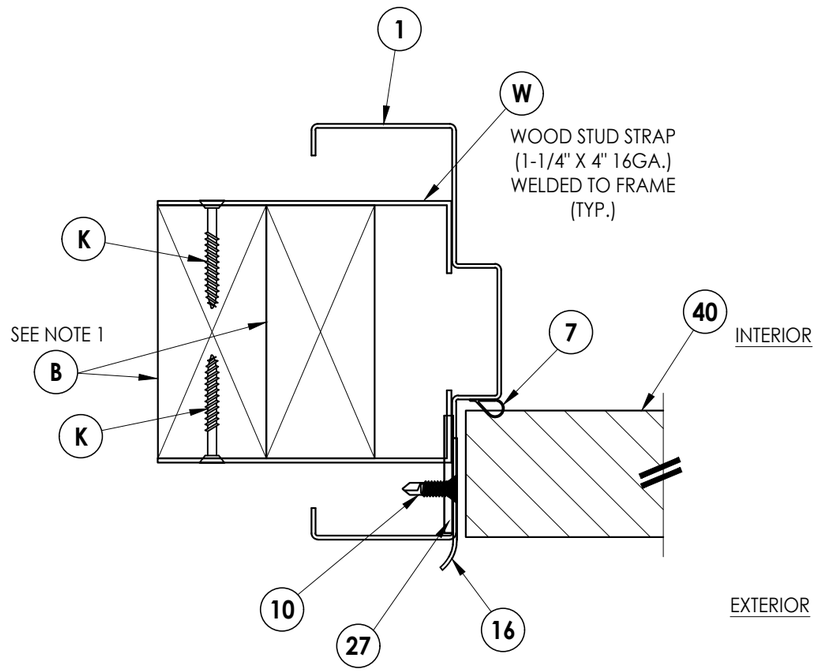

1/5 HORIZONTAL CROSS SECTION
Shown w/ Wood Stud Strap

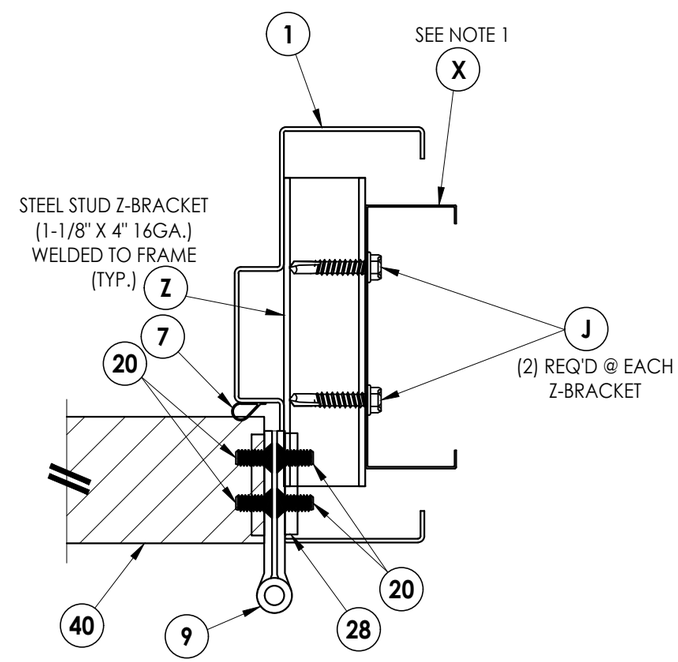

2/5 HORIZONTAL CROSS SECTION
Shown w/ Steel Stud Z-Bracket

NOTE:
1. THE FRAME IS SHOWN ATTACHED TO WOOD & STEEL STUDS AS TESTED. THE BUILDING DESIGNER IS RESPONSIBLE FOR DETERMINING THE ACTUAL STUD DESIGN.

Documents Prepared By:
Lyndon F. Schmidt
P.E. No. 43409
RW BUILDING CONSULTANTS, INC.
P.O. Box 230, Valrico, FL 33595
Phone No.: 813.659.9197
FBPE Registry No. 9813

PRODUCT: MPI COMMERCIAL STEEL DOOR

PART OR ASSEMBLY: HORIZONTAL CROSS SECTIONS

NO.	DATE	BY

REVISIONS

DATE: 8/20/24
SCALE: N.T.S.
DWG. BY: LFS
CHK. BY: RW
DRAWING NO.: FL-40948.6
SHEET 5 OF 8

© 2024 R.W. BUILDING CONSULTANTS INC.

Z:\2023 FBC Drawings\MPI KY, LLC\FL-40948 R3\FL-40948.6.dwg

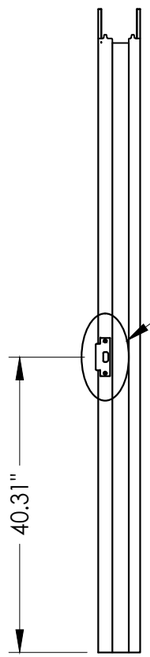

STRIKE JAMB

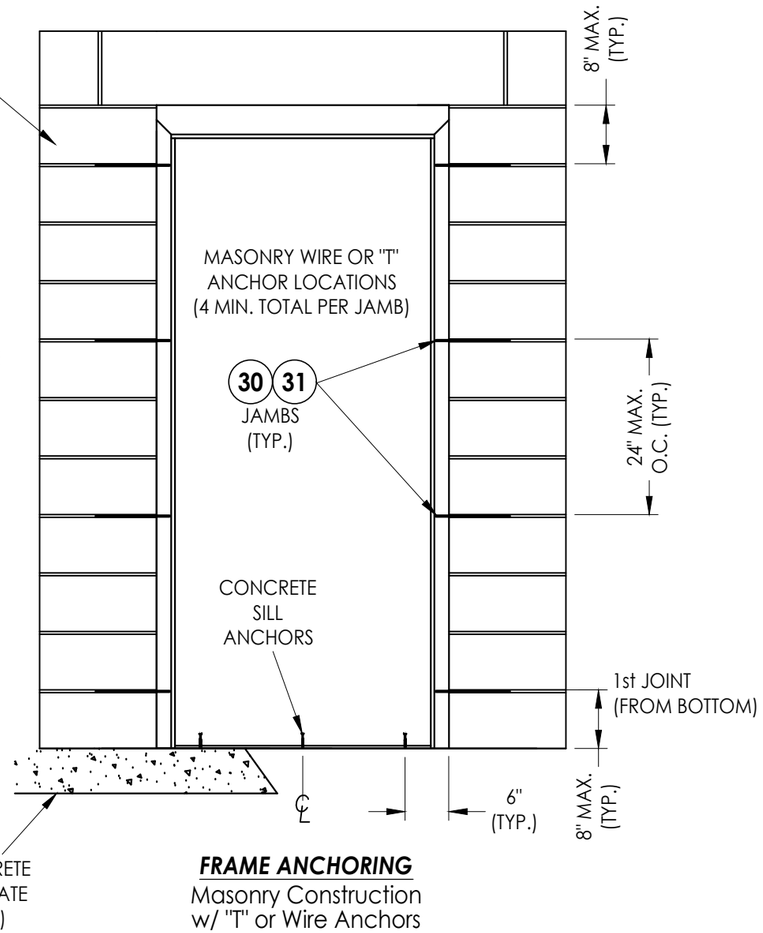

FRAME ANCHORING
Masonry Construction
w/ "T" or Wire Anchors

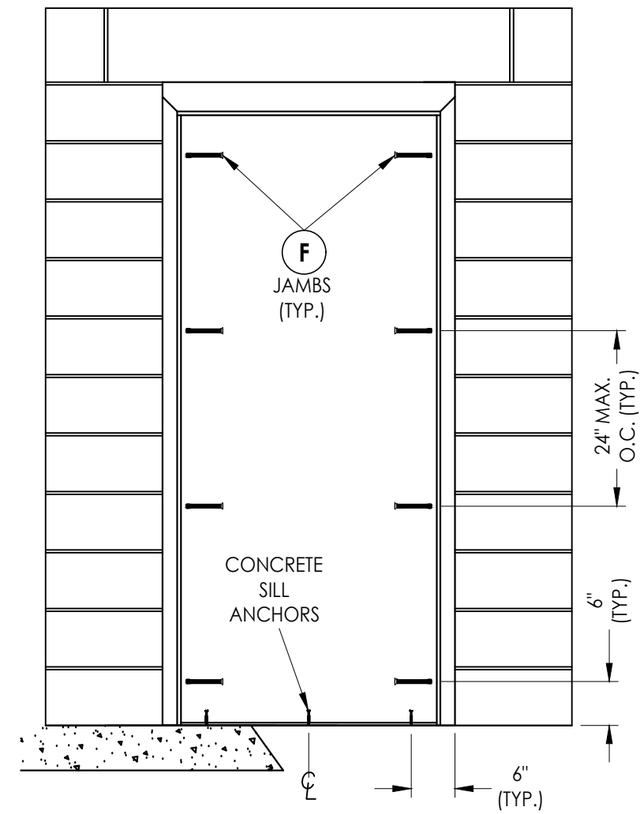

FRAME ANCHORING
Concrete Sleeve Anchors

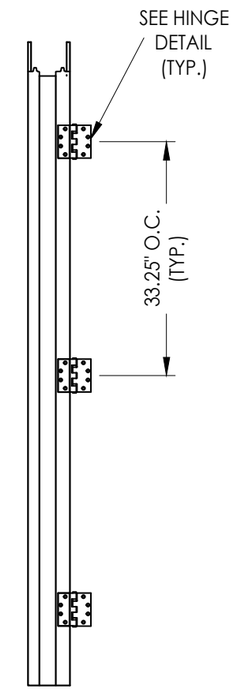

HINGE JAMB

CONCRETE ANCHOR NOTES:

1. *Concrete screw locations at the corners may be adjusted to maintain a minimum 1" edge distance to mortar joints. If concrete screw locations noted as "MAX. O.C." must be adjusted to maintain the minimum edge distance to mortar joints, additional concrete screws may be required to ensure the maximum on center dimension is not exceeded.*
2. *Concrete anchor table:*

ANCHOR TYPE	ANCHOR LOCATION	ANCHOR SIZE	MANUFACTURER	MIN. EDGE DISTANCE	MIN. EMBEDMENT	MIN. CLEARANCE TO ADJACENT ANCHOR
CONCRETE ANCHOR SCREW	SILL	1/4"	TAPCON® (ITW BUILDEX) ULTRACON+® (DeWALT)	2-1/2"	1-3/4"	2"
CONCRET SLEEVE ANCHOR	JAMBS	3/8"	DYNABOLT® (ITW REDHEAD)	2-1/4"	1-1/2"	4-1/2"

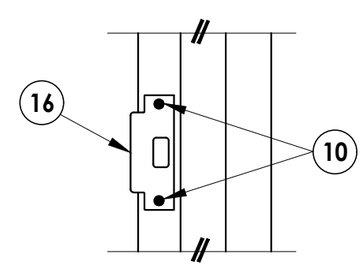

LATCH STRIKE PLATE DETAIL

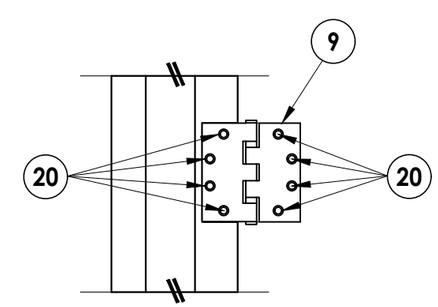

HINGE DETAIL

Documents Prepared By:
RW BUILDING CONSULTANTS, INC.
P.O. Box 230 Valrico FL. 33595
Phone No.: 813.659.9197
Florida Board of Professional Engineers
Certificate Of Authorization No. 9813
Lyndon F. Schmidt, P.E. No. 43409

PRODUCT: MPI STEEL COMMERCIAL DOOR

PART OR ASSEMBLY: FRAME ANCHORING

NO.	DATE	REVISIONS	BY

DATE: 8/20/24
SCALE: N.T.S.
DWG. BY: LFS
CHK. BY: RW
DRAWING NO.: FL-40948.6
SHEET 6 OF 8

© 2024 R.W. Building Consultants Inc.

Z:\2023 FBC Drawings\MPI KY, LLC\FL-40948 R3\FL-40948.6.dwg

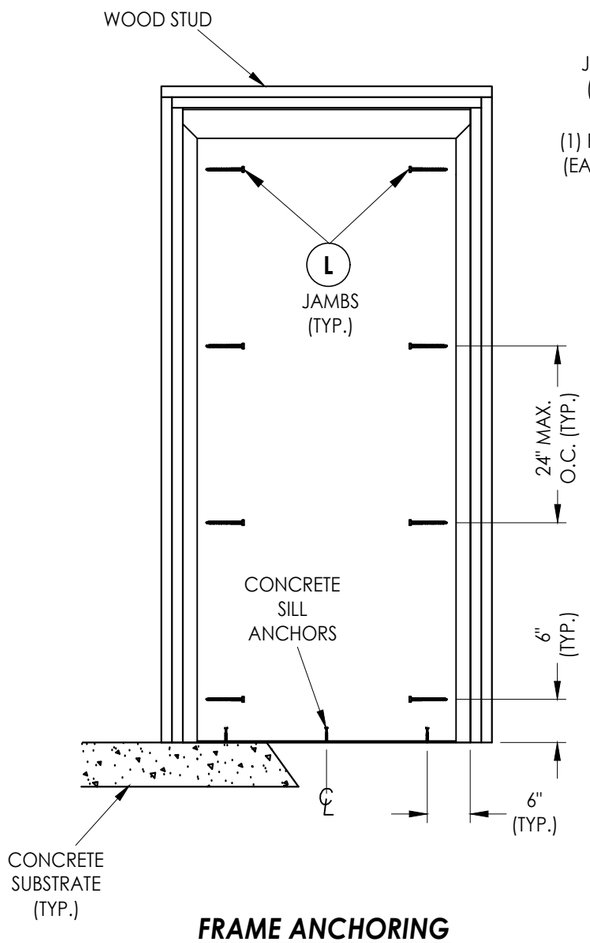

FRAME ANCHORING
w/ Wood Stud Anchors

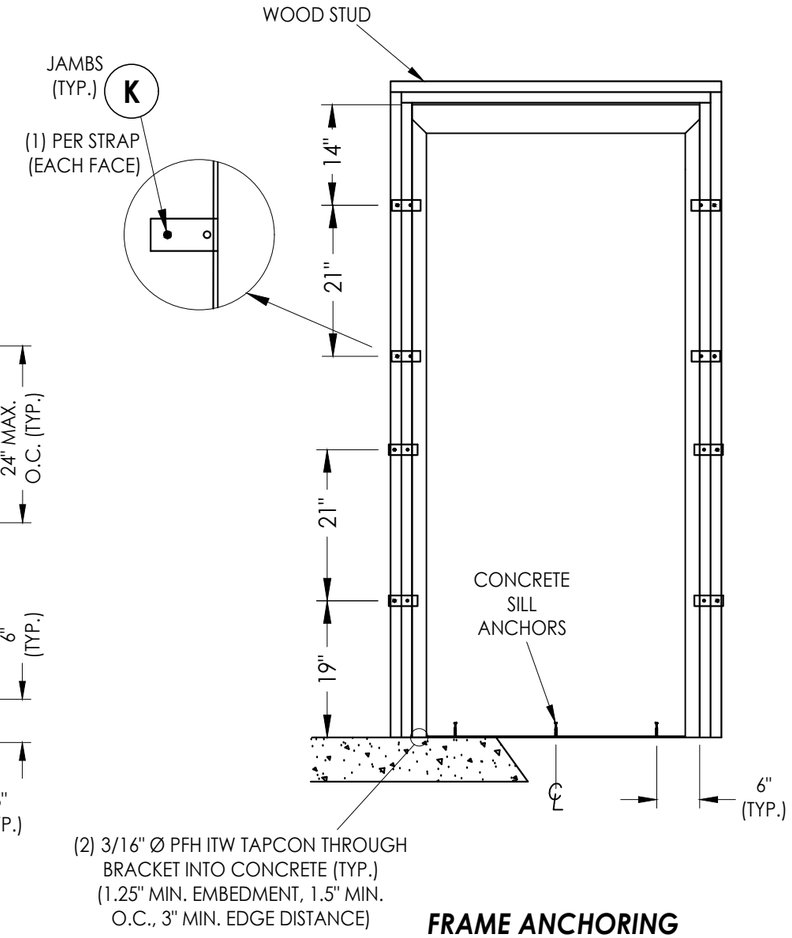

FRAME ANCHORING
w/ Wood Stud Anchors Straps

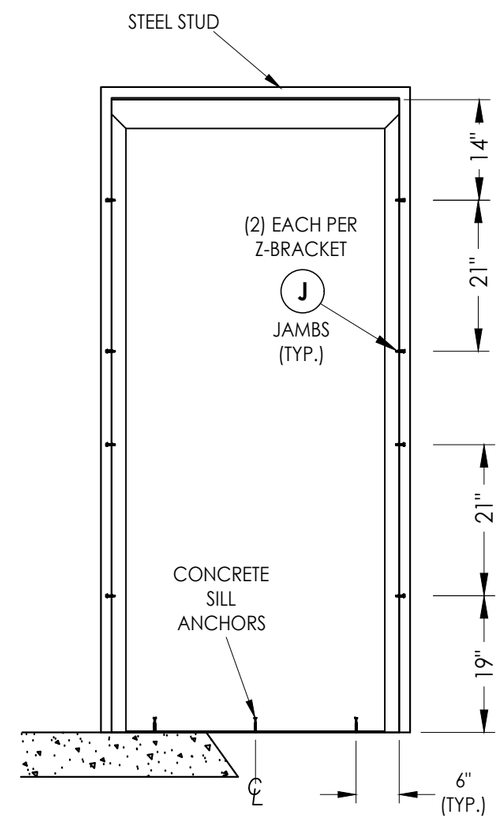

FRAME ANCHORING
w/ Steel Stud Anchors

Documents Prepared By:
RW BUILDING CONSULTANTS, INC.
P.O. Box 230 Valrico FL. 33595
Phone No.: 813.659.9197
Florida Board of Professional Engineers
Certificate Of Authorization No. 9813
Lyndon F. Schmidt, P.E. No. 43409

PRODUCT: MPI STEEL COMMERCIAL DOOR

PART OR ASSEMBLY: FRAME ANCHORING

NO.	DATE	REVISIONS	BY

DATE: 8/20/24
SCALE: N.T.S.
DWG. BY: LFS
CHK. BY: RW
DRAWING NO.: FL-40948.6
SHEET 7 OF 8

© 2024 R.W. Building Consultants Inc.

Z:\2023 FBC Drawings\MPI KY, LLC\FL-40948 R3\FL-40948.6.dwg

BILL OF MATERIALS

ITEM #	DESCRIPTION	MATERIAL
B	2X STUD FRAMING (G>= 0.42)	WOOD
C	1/4" MAX. SHIM SPACE	-
E	MASONRY - 3,000 PSI MIN. CONCRETE CONFORMING TO ACI 301 OR HOLLOW BLOCK (GROUT FILLED) CONFORMING TO ASTM C90	CONCRETE
F	3/8" X 5" PFH ITW DYNABOLT SLEEVE ANCHOR	STEEL
G	EMA ANCHOR (16 GA.)	STEEL
H	1/4" X 2-1/4" PFH CONCRETE SCREW	STEEL
J	#8 X 1" HWH SELF-DRILLING SMS (3 THREADS MIN. THROUGH BRACKET)	STEEL
K	#10 X 1-1/2" FH WOOD SCREW (1-1/4" MIN. EMBEDMENT)	STEEL
L	3/8" X 5" HH LAG SCREW	STEEL
W	WOOD STUD STRAP (1-1/4" X 4" 16GA.)	STEEL
X	25 GA. X 3-5/8" 50 KSI STEEL STUD (ProSTUD)	STEEL
Z	STEEL STUD Z-BRACKET (1-1/8" X 4" 16GA.)	STEEL
1	HOLLOW METAL FRAME (2" JAMBS)	STEEL
2	HOLLOW METAL FRAME (4" HEAD)	STEEL
7	WEATHERSTRIP (OPTIONAL)	FOAM
9	4-1/2" X 4-1/2" HINGE	STEEL
10	#12-24 X 1" COMB MACHINE/WOOD SCREW	STEEL
14	ADA BUMP THRESHOLD (OPTIONAL)	STEEL
16	LATCH STRIKE PLATE	STEEL
20	#12-24 X 1/2" PFH MACHINE SCREW	STEEL
27	FRAME LATCH STRIKE REINFORCEMENT (11 GA.)	STEEL
28	FRAME HINGE REINFORCEMENT (7 GA.)	STEEL
30	MASONRY WIRE ANCHOR	STEEL
31	MASONRY "T" ANCHOR	STEEL
40	DOOR PANEL	-

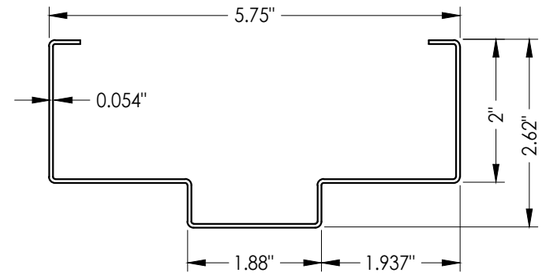

1 **HOLLOW METAL FRAME (16 GA.)**
2" FRAME

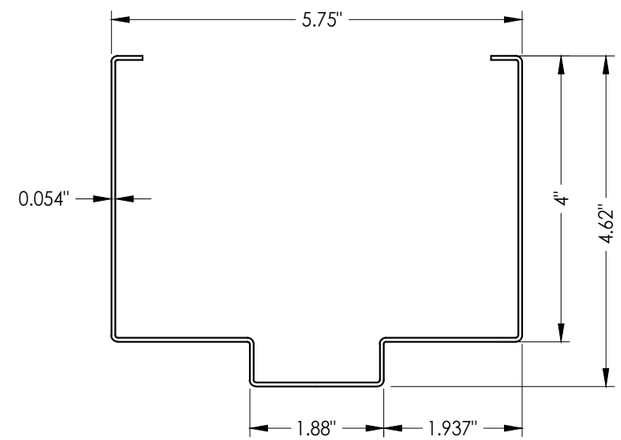

2 **HOLLOW METAL FRAME (16 GA.)**
4" FRAME

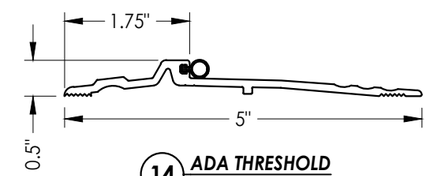

14 **ADA THRESHOLD**
NGP 896V

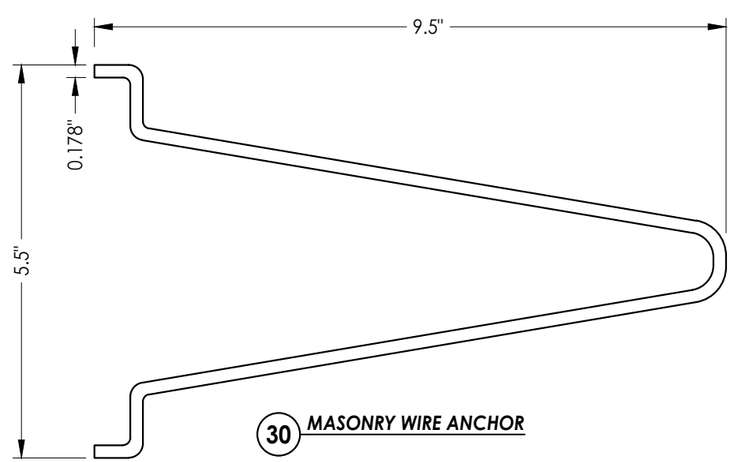

30 **MASONRY WIRE ANCHOR**

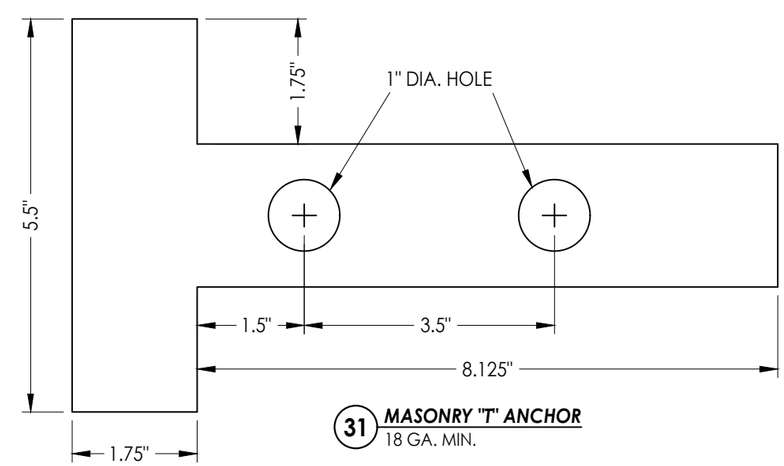

31 **MASONRY "T" ANCHOR**
18 GA. MIN.

Documents Prepared By:
Lyndon F. Schmidt
P.E. No. 43409
RW BUILDING CONSULTANTS, INC.
P.O. Box 230, Valrico, FL 33595
Phone No.: 813.659.9197
FBPE Registry No. 9813

PRODUCT: MPI STEEL COMMERCIAL DOOR

PART OR ASSEMBLY: BILL OF MATERIALS & COMPONENTS

NO.	DATE	BY

REVISIONS

DATE: 8/20/24
SCALE: N.T.S.
DWG. BY: LFS
CHK. BY: RW
DRAWING NO.: FL-40948.6
SHEET 8 OF 8

© 2024 R.W. Building Consultants Inc.

Z:\2023 FBC Drawings\MPI KY, LLC\FL-40948 R3\FL-40948.6.dwg